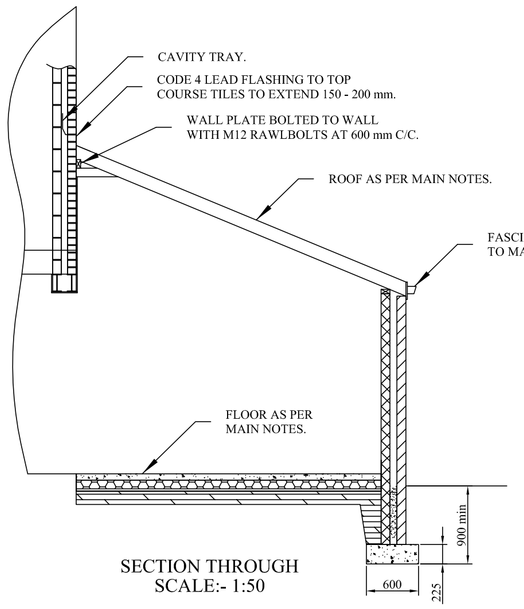

SECTION THROUGH
SCALE:- 1:50

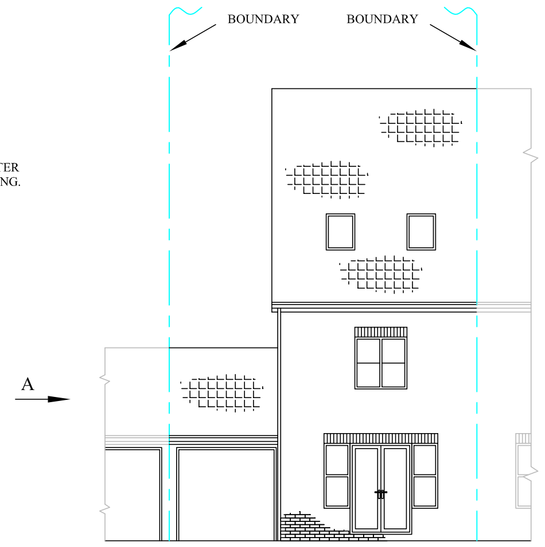

EXISTING REAR ELEVATION

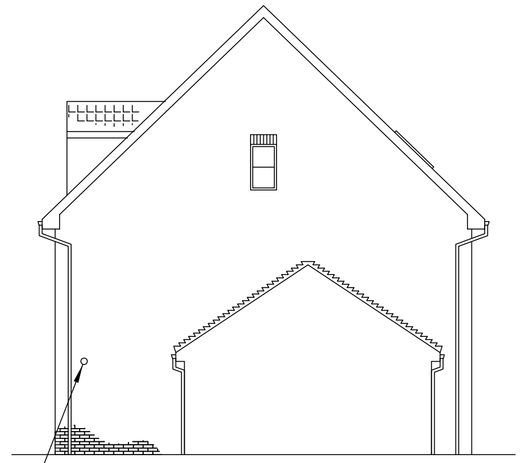

BOILER OUTLEY FLUE. ALL WORKS TO BOILER BY GAS-SAFE REGISTERED ENGINEER.

VIEW ON ARROW A

GAS METER - TO BE MOVED BY APPROPRIATE SERVICE PROVIDER.

EXISTING FRONT ELEVATION

NOTES

1. PLANNING PERMISSION AND BUILDING CONTROL TO BE OBTAINED BEFORE WORK COMMENCES.
2. ALL NEW WORKS ARE TO COMPLY FULLY WITH CURRENT BUILDING REGULATIONS.
3. ALL MEASUREMENTS & DRAIN RUNS TO BE CHECKED ON SITE BEFORE WORK COMMENCES. ANY DISCREPANCIES TO BE REPORTED IMMEDIATELY.
4. BUILDER TO BE RESPONSIBLE FOR CHECKING ALL DIMENSIONS, PITCHES ETC. DESIGNATED OR NOT, PRIOR TO PRICING, BUYING AND BUILDING. METHODS / MATERIALS SHOWN ARE INDICATIVE ONLY, OTHERS MAY BE SUBSTITUTED SUBJECT TO APPROVAL BY THE BUILDING INSPECTOR.
5. THIS DRAWING IS TO BE USED SOLELY FOR THE PURPOSES OF PLANNING AND BUILDING REGULATIONS APRROVAL ONLY.
6. PARTY WALL ACT
   WORK AND NOTICES TO COMPLY FULLY WITH THE PROVISIONS OF THE PARY WALL ACT 1996. CLIENT / HOME OWNER TO BE RESPONSIBLE FOR ENSURING COMPLIANCE.
7. FOUNDATIONS
   EXPOSE EXISTING FOUNDATIONS - LIKELY TO BE OF A RAFT CONSTRUCTION. IF A RAFT CONSULT WITH STRUCTURAL ENGINEER FOR DESIGN.
   IF FOUNDATIONS ARE NOT A RAFT THEN FOUNDATIONS TO BE 600 mm x 225 mm STRIP CONCRETE. TRENCH 900 mm DEEP. A193 REINFORCEMENT MESH WITH 50 mm COVERAGE.
   FOUNDATION DETAILS SUBJECT TO SITE EXCAVATION REVEALING LOADBEARING STRATA.
   UNSUITABLE STRATA WILL NESESSITATE AMENDED FOUNDATION DETAILS BEFORE WORK CONTINUES.
   FOUNDATIONS TAKEN DOWN BELOW DRAINS RUNNING UNDER PROPERTY, SHUTTER OUT AND PACK MINIMUM 50 mm POLYSTRENE AROUND DRAIN PASSING THROUGH FOUNDATION. R.C. LINTEL OVER DRAIN.
   EXPOSE EXISTING FOUNDATIONS PRIOR TO COMMENCEMENT TO ENSURE ORIGINAL DESIGN IS COMPATIBLE WITH PROPOSALS.
   IF DESIGNS DIFFER REVISED DETAILS / CALCULATIONS MAY BE NECESSARY.
   WHERE TREES AND MAJOR VEGETATION EXIST NEAR THE EXCAVATIONS THEN THE FOUNDATION DEPTH WILL BE CALCULATED USING A RECOGNISED GUIDE TO ESTABLISH THE POTENTIAL FOR DAMAGE DUE TO ROOT ACTIVITY.
8. WALLS CONSTRUCTION BELOW D.P.C.
   WALLS BELOW DPC SHALL BE CONSTRUCTED IN TRENCHBLOCK OR DENSE BLOCKWORK IN 1:3 READY MIX MORTAR WITH 3 COURSE OF FACING BRICKS (FL GRADE) TO THE OUTSIDE LEAF. WEAK CONCRETE INFILL TO 225 mm BELOW D.P.C.
9. EXTERNAL WALL CONSTRUCTION
   CAVITY WALLS COMPRISING FACING BRICKWORK, 85 mm CAVITY, WITH FULL FILL DRITHERM CAVITY INSULATION, 100 mm BLOCK WORK INNER LEAF THERMALITE SHIELD BLOCK OR SIMILARLY APPROVED WITH INTERNAL FINISH OF 12.5 mm PLASTERBOARD ON DABS WITH TAPED JOINTS AND MULTI-FINISH PLASTER SKIM.
   ALL BRICKWORK AND BLOCKWORK ABOVE D.P.C. CONSTRUCTED WITH 1:6 READY MIXED MORTAR.
   ALL FACING BRICKWORK TO BE POINTED WITH A BUCKET HANDLE FINISH.
   WALL TIE CROSS CENTRES: 450 mm VERTICAL AND 750 mm HORIZONTAL. WALL TIES TO BE EVERY 225 mm AROUND DOOR AND WINDOW JAMBS.
   WALL TIES TO BE STAINLESS STEEL.
   BRICKS TO MATCH EXISTING BRICKWORK.
   225 mm x 75 mm AIR BRICKS TRUNKED THROUGH CAVITY WALL WITH D.P.C. OVER AT 1500 mm CENTRES TO PROVIDE UNDER FLOOR VENTILATION.
   SHOULD THE NEW EXTENSION COVER ANY EXISTING ARBRICKS SERVING THE EXISTING DWELLINGS SUB-FLOOR, THEN SUITABLE DUCTED VENTILATION WILL BE REQUIRED TO MAINTAIN AIRFLOW.
   CAVITY INSULATION TO EXTEND 150 mm BELOW FLOOR INSULATION.
10. ROOF CONSTRUCTION
    CONCRETE INTERLOCKING ROOF TILES - TO MATCH EXISTING - WITH 100 mm HEADLAP TO BE NAILED EACH COURSE, ON 50 mm x 25 mm GRADE "A" TREATED SOFTWOOD BATTENS ON TYVEK BREATHABLE ROOFING FELT ON 150 mm x 50 mm RAFTERS AT 400 mm CENTRES.
    RAFTERS SUPPORTED BY 2 No. 200 mm x 75 mm HIP RAFTERS SPIKED TOGETHER.
    INSULATION TO BE 1No LAYER 100 mm THICK CELOTEX OR SIMILARLY APPROVED FOIL BACKED RIGID INSULATION BETWEEN RAFTERS WITH AN ADDITIONAL 50 mm CELOTEX INSULATION OR SIMILARLY APPROVED FOIL BACKED RIGID INSULATION ACROSS THE UNDERSIDE OF THE RAFTERS AND IN CONTACT WITH 12.5 mm PLASTERBOARD WITH TAPED JOINTS AND SKIM FINISH.
    MINIMUM 50 mm CLEAR GAP BETWEEN INSULATION AND UNDERSIDE OF FELT.
    ROOF TILES TO BE AT A PITCH NOT LESS THAN THE MINIMUM SPECIFIED BY THE MANUFACTURER.
    BREATHABLE ROOF FELT TO BE FITTED IN ACCORDANCE WITH MANUFACTURERS RECOMMENDATIONS.
11. ROOF WINDOWS
    VELUX WINDOWS TO BE GGL TYPE, SIZE CK04 (550 mm WIDE x 980 mm HIGH).
    ALL WINDOWS TO BE FITTED AS PER MANUFACTURERS INSTRUCTIONS.
    WINDOW OPENINGS TO BE TRIMMED OUT USING 150 mm x 50 mm JOISTS.
    DOUBLE UP RAFTERS EITHER SIDE OF WINDOWS.
12. GROUND FLOOR CONSTRUCTION
    FLOOR TO COMPRISE OF 75 mm SCREED ON 500 GAUGE POLYTHENE SHEET ON 75 mm CELOTEX GA3000 INSULATION ON 1200 GAUGE VISQUEEN D.P.M. ON RAFT FOUNDATION.
    25 mm PERIMETER INSULATION UPSTAND MUST BE PROVIDED AROUND PERIMETER OF FLOOR OF EXTENSION TO PREVENT COLD BRIDGING.
13. WALLPLATE HOLDING DOWN STRAPS
    GALVANISED M5 HOLDING DOWN STRAP (5 x 30 x 1500 GIRTH WITH 100 mm CRANK) SECURED TO WALLPLATE AT 2 M CROSS CENTRES.
14. GABLE STRAPS
    GALVANISED MILDSTEEL LATERAL RESTRAINT STRAPS (5 mm x 30 mm x 1500 mm GIRTH WITH 100 mm CRANK) AT 2 M CROSS CENTRES. FITTED TO THREE RAFTERS ADJACENT TOGAIBLE AT CEILING CHORD AND RAFTER. LONGITUDINAL AND DIAGONAL WIND BRACING LAP-JOINTED AS NECESSARY, TO ABUT GABLE WALL.
15. LEAD FLASHING
    CODE 4 LEAD SHEET FOR FLASHING WHERE ROOFS ABUT THE EXTERNAL BRICKWORK ARE TO BE PROVIDED.
    COMBINED STEP AND COVER FLASHING FIXED IN POSITION WITH LEAD WEDGES MINIMUM 25 mm HORIZONTAL JOINT.
    FLASHING TO BE CONTINUOUS WITH TRAYS MINIMUM 150 mm ABOVE ROOF ABUTMENT.
16. CROSS VENTILATION
    CROSS VENTILATION WILL BE PROVIDED TO ROOF THROUGH SOFFIT BOARDS AT EAVES LEVELS TO GIVE EQUIVALENT 0F 10 mm CLEAR GAP, THIS IS TO HAVE ANTI-VERMIN MESH. EAVES VENTILATION TO BE PROVIDED IN THE FORM OF A PROPRIETARY VENTILATION SYSTEM TO ALLOW FOR THE PASSAGE OF AIR INTO THE ROOF VOID.
17. WINDOW AND EXTERNAL DOOR REVEALS
    WINDOW AND DOOR REVEALS TO INCORPORATE THE INCLUSION OF 25 mm THICK POLYSTYRENE INSULATION AND 150 mm WIDE D.P.C. BETWEEN THE EXTERNAL BRICKWORK AND THE REVEAL BLOCK TO PREVENT COLD BRIDGING OR BY USING A PATENT INSULATED CAVITY CLOSER.
18. HORIZONTAL D.P.C's.
    HORIZONTAL D.P.C. TO ALL WALLS 100 mm WIDE, 2000G BLOCK POLYTHENE (TO BS 615 9984), 150 mm ABOVE GROUND OR PAVING LEVEL.
    PROVIDE CAVITY TRAY D.P.C. AT ABUTMENTS OF ROOF TO CAVITY WALL OR CHIMNEYS.
19. LOAD BEARING LINTELS
    LOAD BEARING LINTELS ARE TO BE USED OVER EVERY NEW WINDOW AND DOOR
    ALL LOAD BEARING LINTELS ARE TO BE OF THE TYPE MANUFACTURED BY CATNIC OF CN3 OR SIMILAR UNLESS OTHERWISE STATED.
    MINIMUM END BEARING OF ANY LINTEL TO BE 150 mm.
    ALL LINTELS AND STEEL BEAMS TO BE ENCASED WITH 12.5 mm PLASTER BOARD AND SKIM TO GIVE 1/2 HOUR FIRE RESISTANCE
20. WINDOWS
    WINDOWS TO HABITABLE ROOMS TO HAVE AN OPENING AREA NOT LESS THAN 1/20 OF THE FLOOR AREA OF THE ROOM.
    WINDOWS TO MATCH EXISITING
21. GLAZING
    TO ACHIEVE 'U' VALUE OF 1.6 WINDOWS TO BE DOUBLE GLAZED WITH 'SOFT' LOW-E COATING WITH A 16 mm ARGON FILLED GAP.
    ALL GLAZING TO BE IN ACCORDANCE WITH APPROVED DOCUMENT N.
    EXTERNAL DOORS WHERE GLAZED TO BE DOUBLE GLAZED.
    GLAZING OF UP TO 800 mm ABOVE F.F.L. IN INTERNAL WALLS AND PARTITIONS ARE TO BE EITHER TOUGHENED OR LAMINATED SAFETY GLASS.
    GLAZING UP TO 1500 mm ABOVE F.F.L. IN A DOOR OR SIDE PANELS WITHIN 300 mm OF THE DOOR TO BE TOUGHENED OR LAMINATED SAFETY GLASS.
22. WASTE PIPES
    GENERALLY ALL WASTEPIPES TO BE UPVC. ALL FITTINGS TO HAVE 75 mm DEEP SEAL TRAPS ON WASTE PIPEWORK TO BS 4514 BY APPROVED SUPPLIER 40 mm DIA BATHWASTES, 32 mm DIA. BASIN WASTES, AND WITH 40 mm DIA. WASTE TO SINK.
    ANTI VACUUM TRAPS TO WASH BASIN WHERE WASTE PIPE EXCEEDS 1.7 M.
    S.V.P's TO BE 100 mm x 2 AND TO TERMINATE 900 mm ABOVE ANY WINDOWHEAD AND BE FITTED WITH A WIRE CAGE.
23. RAINWATER PIPES AND GUTTERS
    UPVC RAINWATER PIPES AND GUTTERS TO MATCH EXISTING AND TO BE BY APPROVED SUPPLIER.
    FIXED IN ACCORDANCE WITH MANUFACTURER'S RECOMMENDATIONS & INCLUDING BRACKETS, CONNECTORS, BEND BRANCHES, STOP ENDS, ETC.
24. ELECTRICS
    ALL SOCKETS AND SWITCHES TO BE SITED BETWEEN 450 mm AND 1200 mm ABOVE FLOOR LEVEL IN ACCORDANCE WITH PART M OF THE APPROVED DOCUMENT. POSITION OF SOCKETS AND LIGHTS TO BE DISCUSSED WITH CLIENT.
    ANY NOTIFIABLE ELECTRICAL WORK TO BE INSTALLED AND CERTIFIED BY A COMPETENT ELECTRICAL CONTRACTOR TO ENSURE COMPLIANCE WITH BS 7671 AND REQUIREMENTS OF APPROVED DOCUMNET P.
25. ENERGY EFFICIENT LIGHTING
    ENERGY EFFICIENT LIGHT FITTINGS TO BE AT LEAST 75% OF ALL NEW FITTINGS.
26. MEANS OF VENTILATION
    HABITABLE ROOMS:- A CONTROLLABLE TRICKLE VENTILATOR TO BE INSTALLED IN THE WINDOW TO PROVIDE A MINIMUM AREA OF 8000 sq.mm.
27. DRAINS
    UNDERGROUND DRAINS - 100 mm HEAVY DUTY PVC DRAINS SURROUNDED IN 150 mm PEA-GRAVEL. MINIMUM FALL 1:60. CONCRETE SLAB OVER TRENCH WHERE DRAINS PASS UNDER BUILDING OR YARD.
    WHERE DRAINS PENETRATE CAVITY WALLS PROVIDE CONCRETE LINTELS OVER WITH 50 mm CLEARANCE AROUND THE DRAIN AND FILL VOID WITH COMPRESSIBLE MATERIAL AND SEAL.
    GULLIES TO BE RODDABLE WHERE CONNECTING DIRECTLY TO DRAINAGE RUNS.
    INSPECTION CHAMBERS TO BE HEPWORTH UNIVERSAL MANHOLE SYSTEM POLYPROPYLENE INSPECTION CHAMBER (PPIC) WITH SQUARE DUCTILE IRON COVER AND FRAME TO SUIT, ALL FITTED IN ACCORDANCE WITH MANUFACTURERS INSTRUCTIONS.
28. MASTIC SEAL ALL NEW WOODWORK.
29. ALL TIMBER JOIST ENDS TO BE TREATED WITH PRESERVATIVE WHERE BUILT IN.
30. ALL WORK TO BE CARRIED OUT IN GUIDANCE WITH BUILDING REGULATIONS RELATING TO THE CONSERVATION OF FUEL AND POWER TO DWELLINGS APPROVED DOCUMENT L1B - OCTOBER 2010.
31. ALL WORK UNDERTAKEN TO BE TO THE SATISFACTION OF THE BUILDING INSPECTOR.

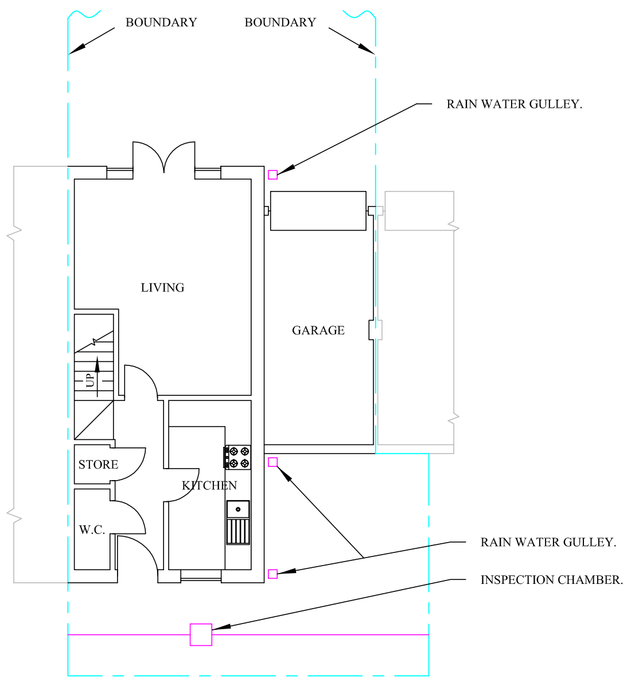

EXISTING GROUND FLOOR PLAN

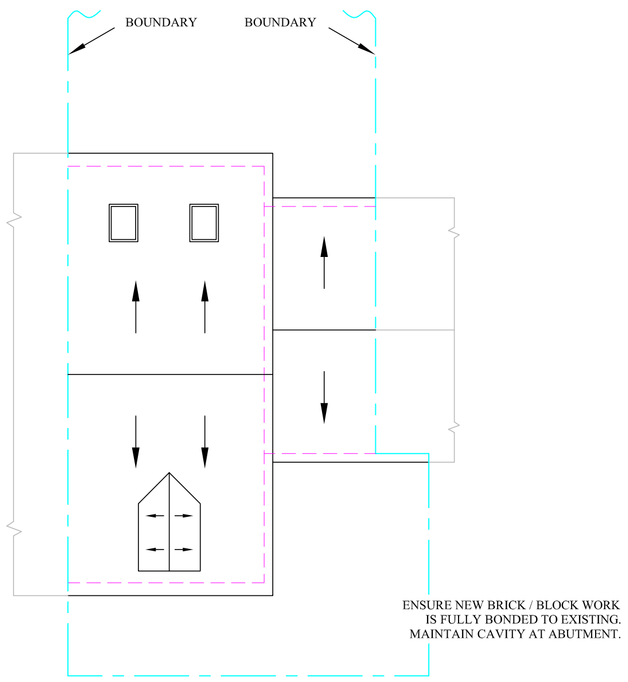

EXISTING ROOF PLAN

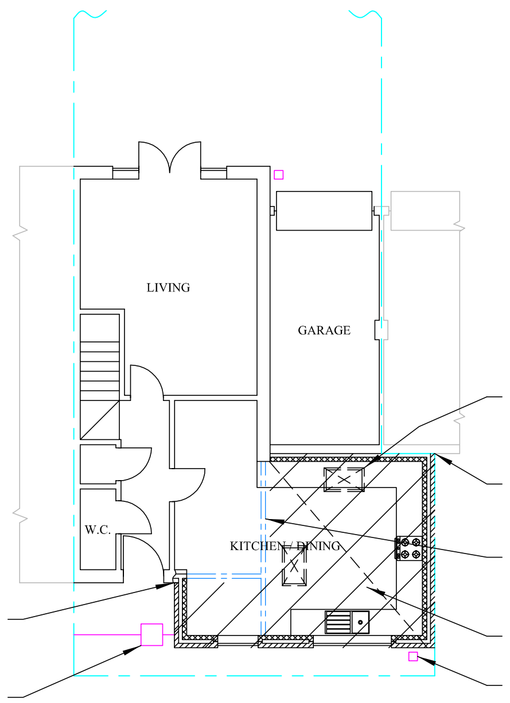

PROPOSED GROUND FLOOR PLAN

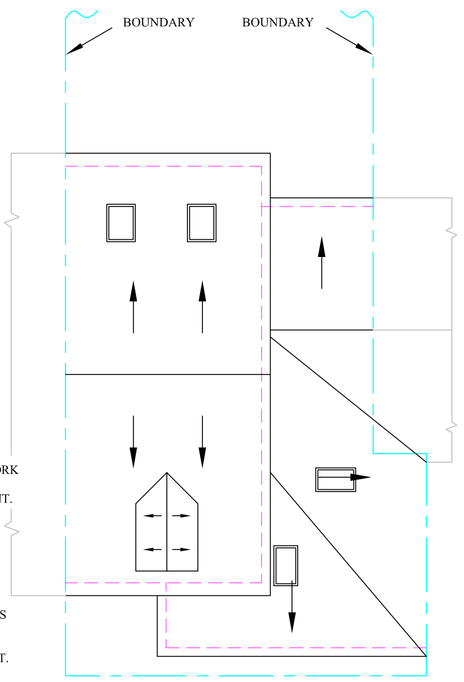

PROPOSED ROOF PLAN

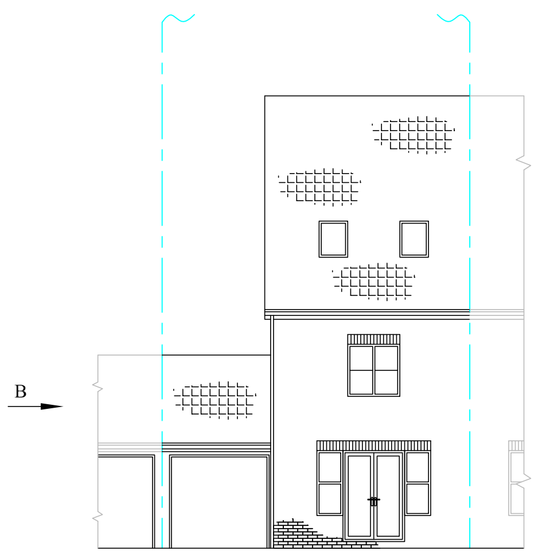

PROPOSED REAR ELEVATION

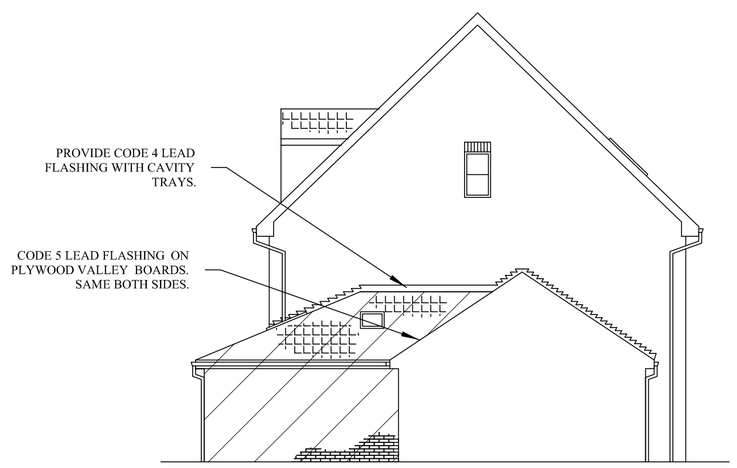

VIEW ON ARROW B

PROPOSED FRONT ELEVATION

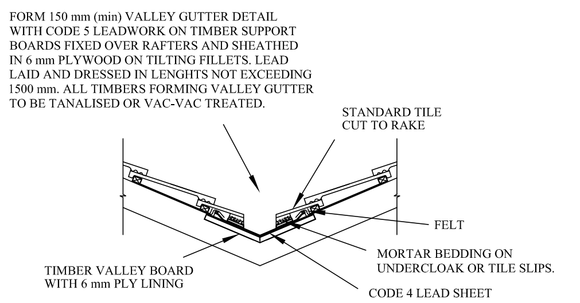

DETAIL OF LEAD VALLEY CONSTRUCTION
SCALE 1:20

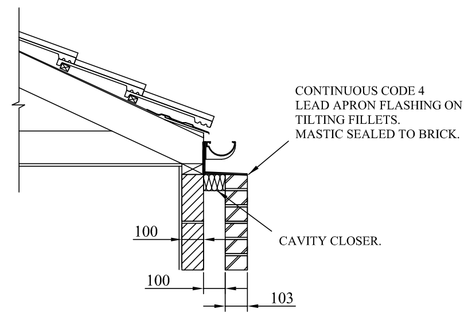

DETAIL OF BOUNDARY GUTTER
(SCALE:- 1:20)

LEGEND

= PROPOSED DEVELOPMENT

ASSOCIATED DRAWINGS:-

AD-15-61 - SHT. 1 - PROPOSED EXTENSION.
AD-15-61 - SHT. 2 - EXISTING & PROPOSED SITE PLANS.

DRAWING No. AD-15-61					
CLIENT: MR & MRS MOORE					
ADDRESS: 6 TIDESPRING ROW, HEEBURN, TYNE & WEAR, NE31 1AS					
TITLE:	FOR DRAWINGS TEL:- 0191 4204980 or 07970670053				
	REV	DATE	SCALE	SHT	SIZE
PROPOSED EXTENSION	0	OCT - 2015	1:100	1	A1